Mounting Positions
Posiciones de Montaje
Posições de Montagem

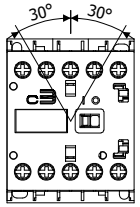

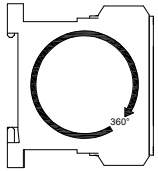

Dimensions / Dimensiones / Dimensões

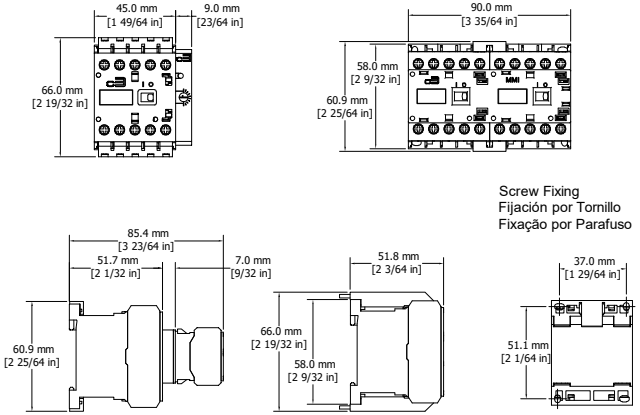

Maximum Number of Front Mounted Auxiliary Contacts	
Coil Voltage	Maximum Number
AC	Up to four (4) additional Poles
DC	Up to two (2) additional poles

Snap on DIN rail fixing 35mm to DIN EN 50022
Fijación per rieles DIN 35mm EN 50022
Fixação por trilho 35mm DIN EN 50022

Operating Temperature: -25 to +55 / -13 to +131 °C / °F
Temperatura de funcionamiento: -25 to +55 / -13 to +131 °C / °F
Temperatura de operação: -25 to +55 / -13 to +131 °C / °F

Maximum Cross Section and Tightening Torque Connection

Sección Máxima y Torque de Conección

Seção Máxima e Torque de Conexão

Stranded/Solid 60°/75°C Wire	Cat. 300-M07...M16, C16							
	Power Poles		Coil Terminal A1—A2		Auxiliary		300-MFA, 300-CFA	
	IEC	UL	IEC	UL	IEC	UL	IEC	UL
mm² / AWG	0,5...2,5	20...14	0,5...2,5	20...14	0,5...2,5	20...14	0,5...2,5	20...14
mm / in	7	1/4	7	1/4	7	1/4	7	1/4
Torque Nm / lb-in	1...1,2	8,8...10,6	1...1,2	8,8...10,6	1...1,2	8,8...10,6	1...1,2	8,8...10,6
Screwdriver	Philips No. 2		Philips No. 2		Philips No. 2		Philips No. 2	

Short Circuit Current Protection

USA/Canada
Suitable for use on a circuit capable of delivering not more than XXX rms symmetrical amperes. Use fuses only.

Cat. 300-...	XXX = 5,000 Max. Fuse Class RK5 600V max.	XXX = 100,000 Max. Class J 600V max.
M07	30 A	15 A
M09	30 A	15 A
M12	30 A	15 A
M16	40 A	20 A

IEC 60947-4-1 / EN 60947-4-1
Ue ≤ 690 V

Cat. 300-...	gL/gG max. Type 1	gL/gG max. Type 2
M07	35 A	20 A
M09	35 A	20 A
M12	35 A	25 A
M16	35 A	25 A

IEC 60947-5-1	Auxiliary Location	gL/gG max.
	Built-In	10 A
	300-MFA	10 A
	300-CFA	10 A
	300-C16	10 A

c3controls®

P.O. Box 496
Beaver, PA 15009
USA
724.775.7926
www.c3controls.com

series 300 miniature

Contactor Installation Instructions
Instrucciones de Instalación de Contactores
Instruções de Instalação de Contatores
(Series 300-M & 300-C)

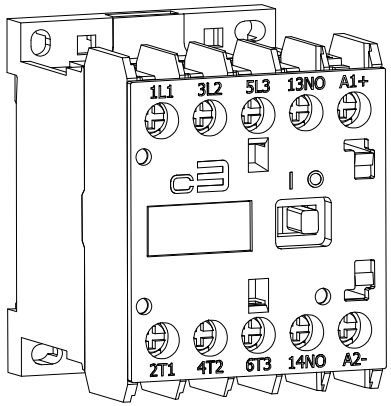

Single Phase wiring

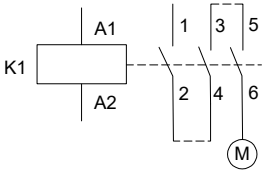

Three Phase Wiring

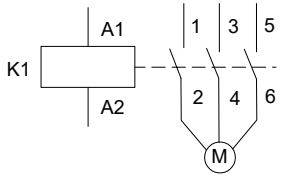

Two Phase wiring

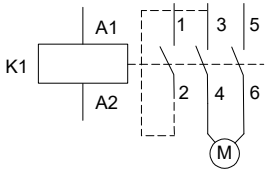

CONTACTORS/CONTACTORES/CONTATORES
Series 300-M & 300-C

WARNING:
- Disconnect power before proceeding with any work on this equipment.
- Installation and maintenance by technical personnel only.
- Install products in accordance with the operation instructions and the NEC (U.S. National Electrical Code) regulations or local applicable codes and standards.

AVERTISSEMENT:
- Débranchez le pouvoir(la puissance) avant la suite de n'importe quel travail sur cet équipement.
- Installation et maintien par personnel technique seulement.
- Installez des produits conformément aux instructions d'opération et le NEC (le Code Électrique national américain) des règlements ou des codes applicables locaux et des normes.

ATENCIÓN:
- Desconectar de la red eléctrica antes de hacer cualquier trabajo en este equipamiento.
- Recomiendase instalación por profesional calificado.
- Respetar normas nacionales y locales.
- Producto destinado a la utilización en instalciónes eléctricas de baja tensión.

ATENÇÃO:
- Desconecte da rede elétrica antes de proceder qualquer trabalho neste equipamento.
- Somente profissionais qualificados podem efetuar a instalação e manutenção.
- Obedecer normas nacionais, estaduais, locais e instruções de operação.

Accessories
Accesorios
Acessórios

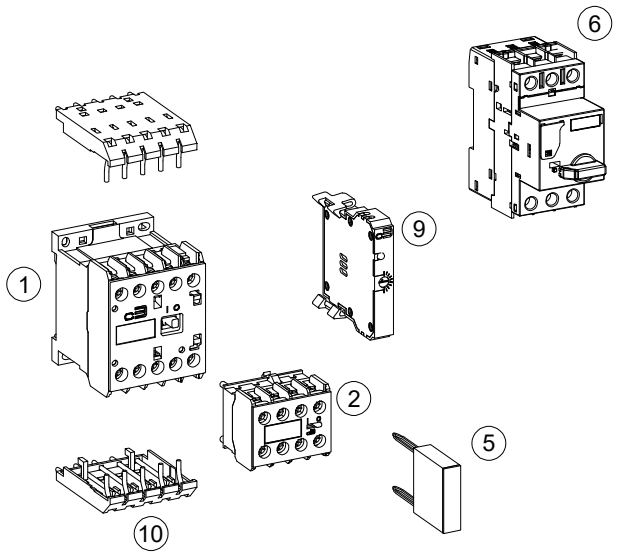

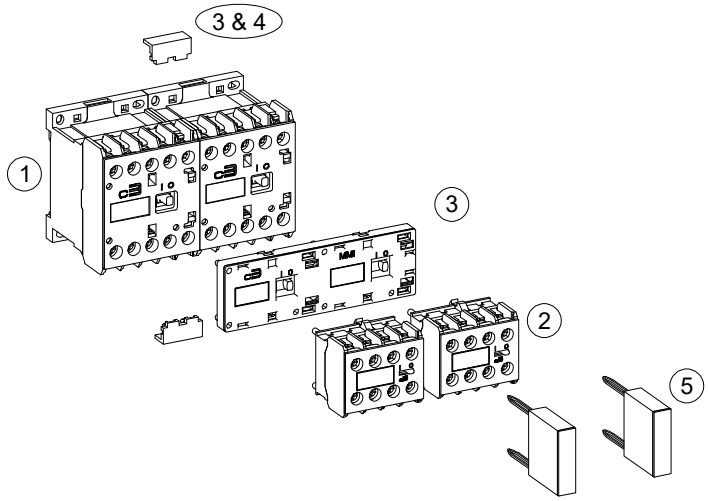

1 - Mini-Contactor 300-M, 300-C / Minicontactor 300-M, 300-C / Minicontactor 300-M, 300-C

2 - Front Mounted Auxiliary Contact Block 300-MFA, 300-CFA / Bloque de Contactos Auxiliares Frontales 300-MFA, 300-CFA / Bloco de Contatos Auxiliares Frontais 300-MFA, 300-CFA

3 - Mechanical Interlock 300-MMI / Enclavamiento Mecánico 300-MMI / Bloco de Intertravamento Mecânico 300-MMI

4 - Mechanical Latch Block 300-MLB / Bloque de Retención Mecánica 300-MLB / Bloco de Retenção Mecânica 300-MLB

5 - Surge Suppressor Block 300-MRC (RC) 300-MVS (Varistor) 300-MDS (Diode) / Bloque Supresor de Sobretensión 300-MRC (RC) 300-MVS (Varistor) 300-MDS (Diodo) / Bloco Supressor 300-MRC (RC) 300-MVS (Varistor) 300-MDS (Diodo)

6 - Motor Circuit Breaker 330-T25 / Guardamotor 330-T25 / Disjuntor-Motor 330-T25

7 - Connector 330-T25 x 300-M 330-CM16 / Conector 330-T25 x 300-M 330-CM16 / Conector 330-T25 x 300-M 330-CM16

8 - Overload Relay 320-B1 / Relé de Sobrecarga 320-B1 / Relé de Sobrecarga 320-B1

9 - Timer 300-MTED, 300-MTDD / Temporizador 300-MTED, 300-MTDD / Temporizador 300-MTED, 300-MTDD

10 - Connector PCI 300-MPCLM / Conexión para PCB 300-MPCLM / Conexão para Placa de Circuito Impresso 300-MPCLM

Product Installation Data can be downloaded from our website, www.c3controls.com

Thank You for choosing

c3controls®

IL100142
REV 8